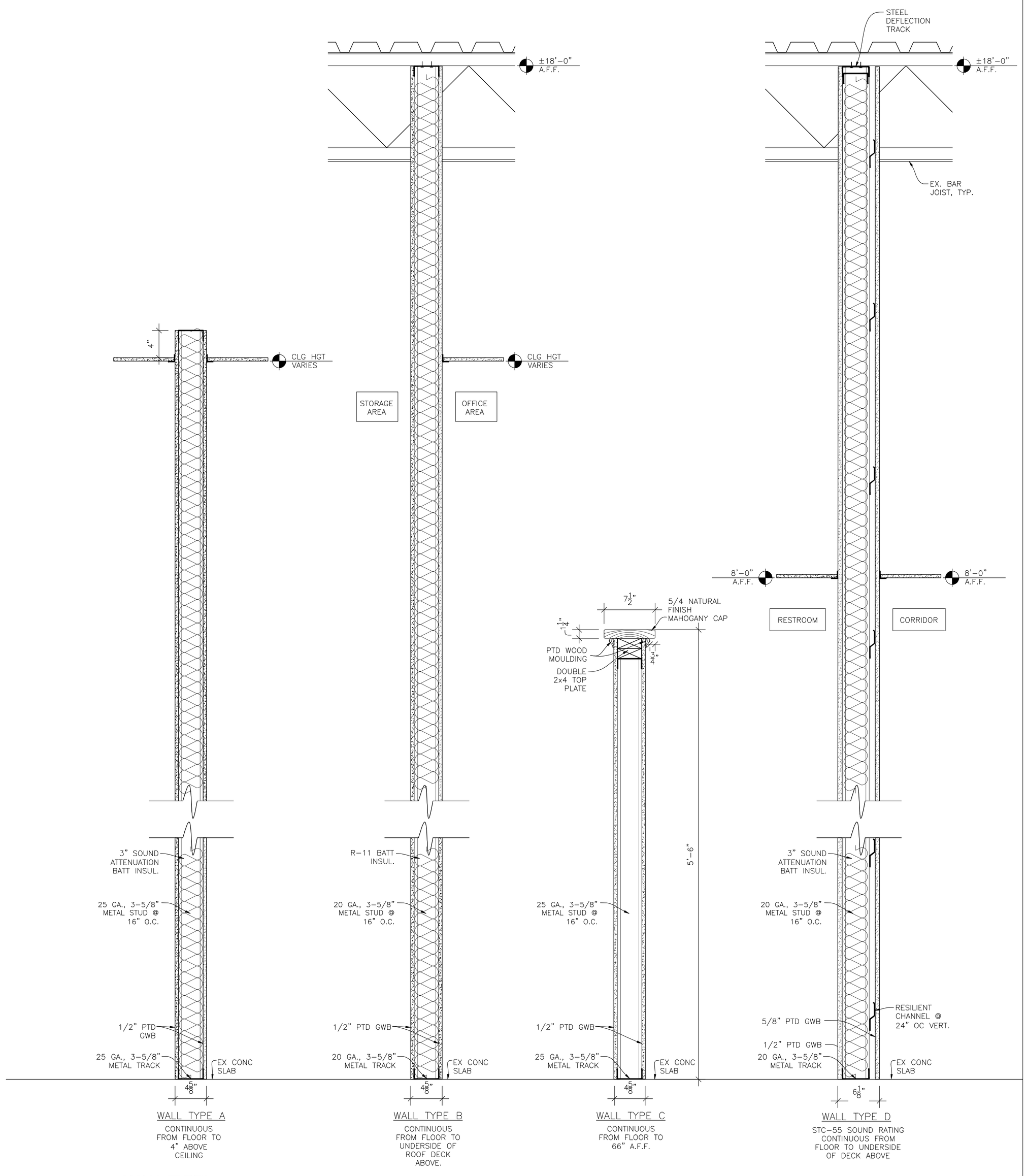


## WALL TYPES

SCALE: 1-1/2" = 1'-0"

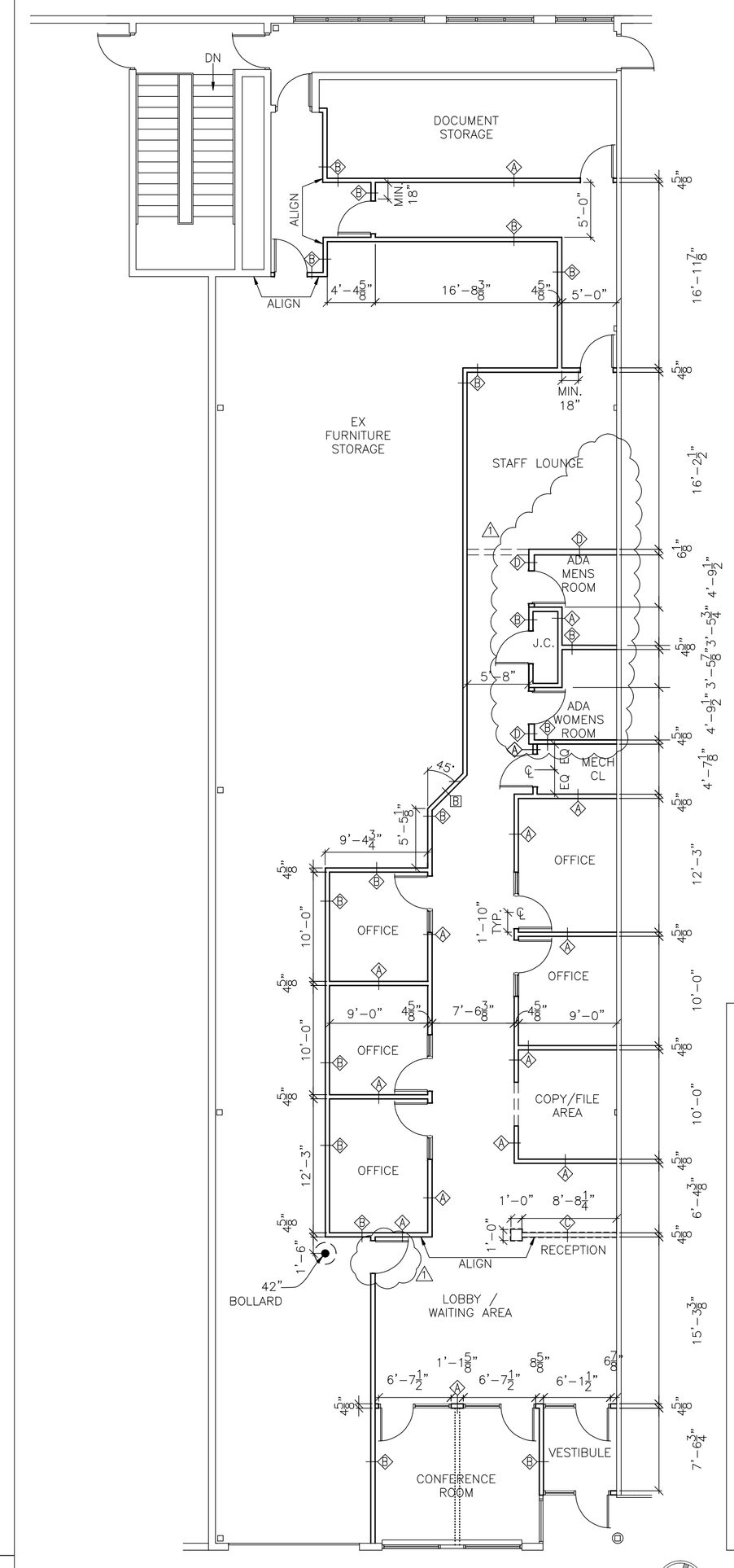


## CONSTRUCTION LAYOUT PLAN

SCALE: 1/8"=1'-0"

### CONSTRUCTION LAYOUT PLAN NOTES

1. ALL INTERIOR WALL DIMENSIONS ARE FROM FACE-OF-FINISHED WALL TO FACE-OF-FINISHED WALL. COORDINATE WITH WALL TYPES AND WALL SECTIONS.
2. ALL INTERIOR HOLLOW METAL DOOR OPENINGS IN METAL-FRAMED WALLS SHALL BE 1'-10" FROM FACE OF WALL ON HINGE SIDE OF DOOR TO CENTERLINE OF DOOR OPENING, UNLESS OTHERWISE DIMENSIONED.
3. FAILURE TO LOCATE DOORS AS NOTED ABOVE MAY RESULT IN INADEQUATE CLEARANCE FOR HANDICAP ACCESSIBILITY.
4. ALL WINDOW LIGHT DIMENSIONS ARE TO CENTERLINE OF ROUGH OPENING. COORDINATE WITH ALUMINUM WINDOW TYPES.
5. ALL STOREFRONT OPENINGS ARE MEASURED TO SIDES OF ROUGH OPENING. COORDINATE WITH STOREFRONT TYPES.
6. REQUIRED MINIMUM HANDICAP ACCESSIBILITY CLEARANCES AT THE LATCH SIDE OF DOORS ARE NOTED AS "MIN. 18".


SYMMETRY FIRST ARCHITECTS, LLC
8600 Foundry Street
Box 2069
Savage, MD 20763
240-568-0700
240-568-0354 fax
www.symmetryfirst.com


STAMP

I CERTIFY THAT THESE DOCUMENTS WERE PREPARED OR APPROVED BY ME, AND THAT I AM A DULY LICENSED ARCHITECT UNDER THE LAWS OF THE STATE OF MARYLAND, LICENSE NUMBER 9727. EXPIRATION DATE 11-2-11


NOTE: THESE DRAWINGS ARE THE PROPERTY OF SYMMETRY FIRST ARCHITECTS, LLC AND, AS SUCH, MAY NOT BE REPRODUCED OR RE-USED, EITHER WHOLLY OR IN PART, WITHOUT PRIOR WRITTEN CONSENT OF SYMMETRY FIRST ARCHITECTS, LLC.


PROJECT PHASE

BID DOCUMENTS

PROJECT TITLE

A.O.C. TENANT BUILD-OUT

2001 COMMERCE PARK DR., SUITE 2001-B
ANNAPOLIS, MD 21401

REVISIONS

| NO. | DATE | ISSUED FOR |
|---|---|---|
| 1 | 10.21.11 | PERMIT REVISIONS |

| | |
|---|---|
| PROJECT NUMBER | 11-160 |
| DATE | 9.1.11 |
| SCALE | AS NOTED |

DRAWING TITLE

CONSTRUCTION LAYOUT PLAN, WALL TYPES

SHEET NUMBER

A0